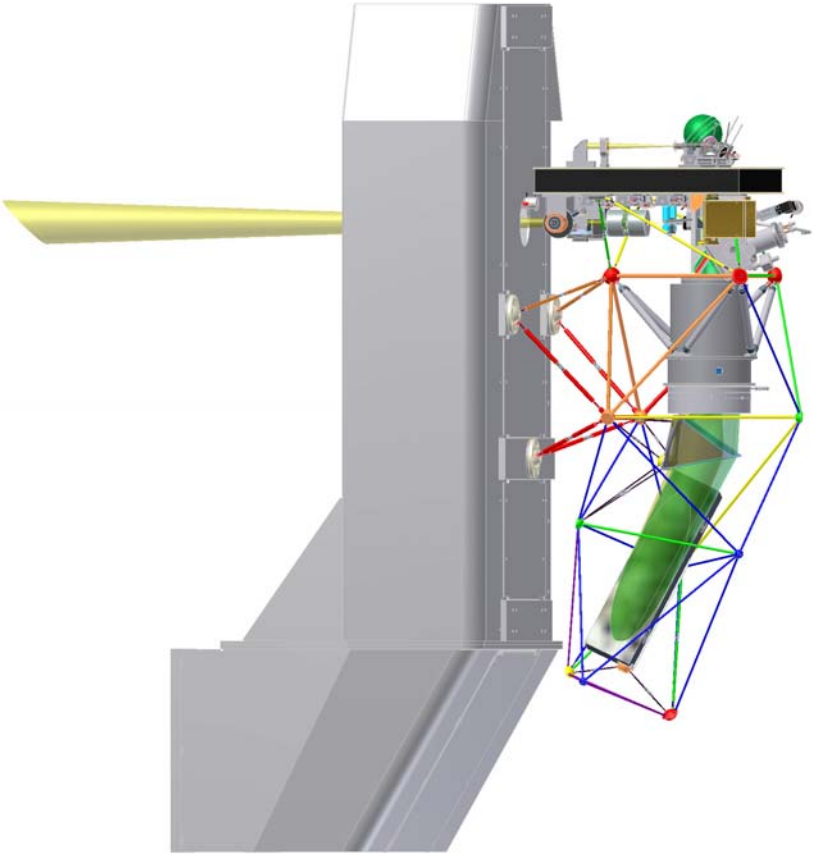

Exhibit B
PLANET FINDER SPECTROMETER
ELEVATION VIEW